ITEM NO.	PART NUMBER	DESCRIPTION	Material	DRAWING #	QTY.
1	BO-1 FW	FLAT WASHER 1"		STOCK	1
2	FP-SP100A	SHAFT, SPINNER, SP100	CF ANN 4142 RDx 12	90-1605	1
3	FP-SP118A-2	SPINNER, BACK PLATE	1/4" CS	90-2600	1
4	FP-SP118A-3	GUSSET, SPINNER 5x4	1/4" HRS	90-1602	2
5	HD-PL .4375 HD	7/16 Lynch Pin.		STOCK	1
6	ST-PI 1.25xSCH.40 L 2	LENGTH	PIPE SCH 40 1-1/4	STOCK	1

REVISIONS			
REV.	DESCRIPTION	DATE	APPROVED
C	UPDATED TO MATCH 3D MODEL	12/17/2012	

REQD QTY: 2

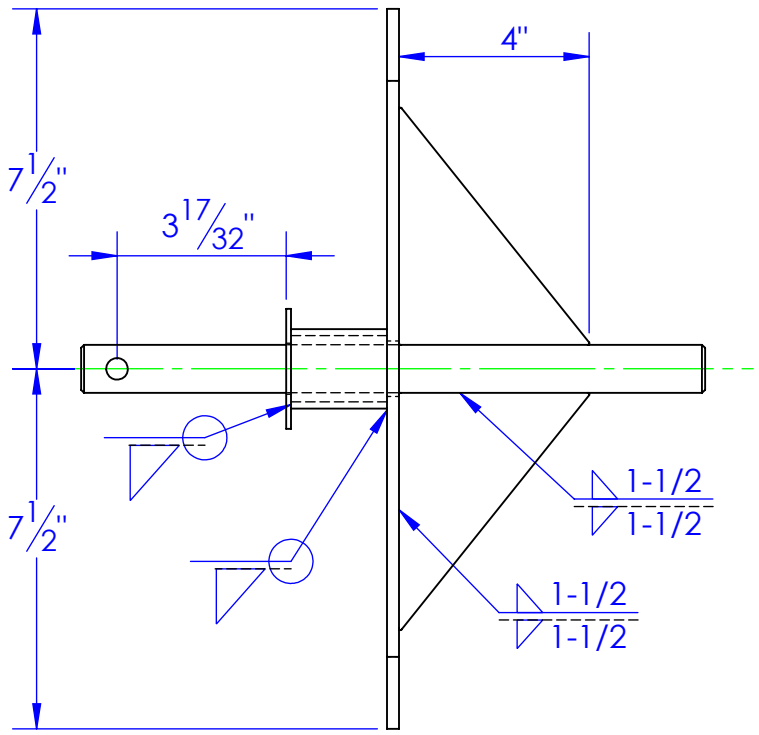

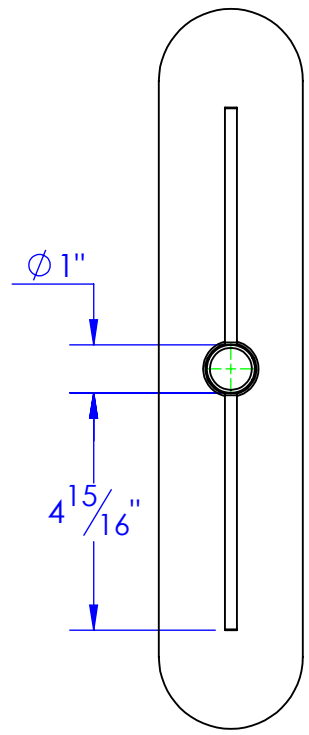

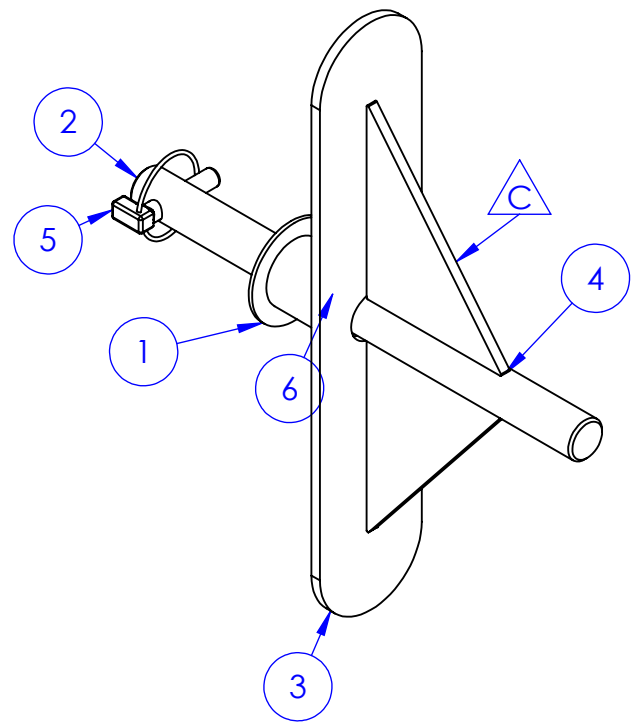

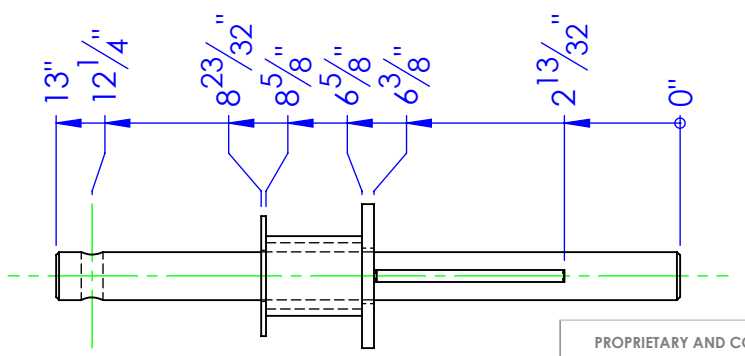

PROPRIETARY AND CONFIDENTIAL

THE INFORMATION CONTAINED IN THIS DRAWING IS THE SOLE PROPERTY OF TRIPLE C INC. ANY REPRODUCTION IN PART OR AS A WHOLE WITHOUT THE WRITTEN PERMISSION OF TRIPLE C INC. IS PROHIBITED.

DIMENSIONS ARE IN INCHES
TOLERANCES:
FRACTIONAL ±1/16
ANGULAR: MACH ±1 BEND ±
TWO PLACE DECIMAL ±010
THREE PLACE DECIMAL ±005

MATERIAL --

DO NOT SCALE DRAWING

	NAME	DATE
DRAWN	HEATH	12/18/2012
PART #	OP-SP-100	
ASM #		

COMMENTS:
SP-100, SPINNER WELDMENT

P.O. BOX 248,
SABETHA, KS 66534

TRIPLE C INC.

SIZE	DWG. NO.	REV.
A	90-1604 C	C

SCALE:1:4 WEIGHT: 7.89 SHEET 1 OF 1